QFN028-P-0405B
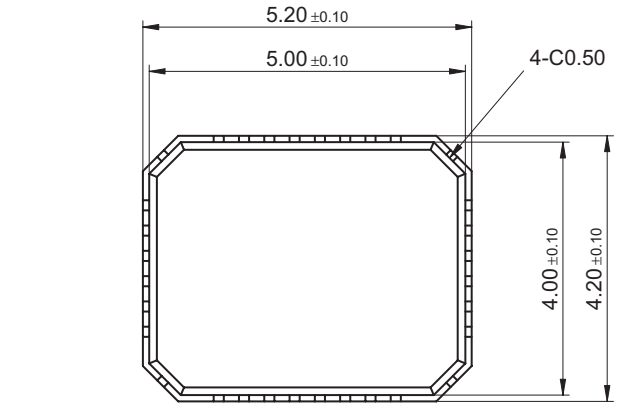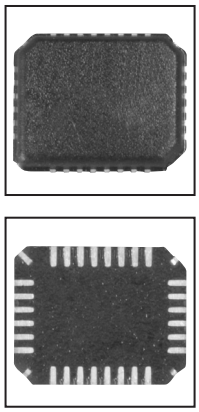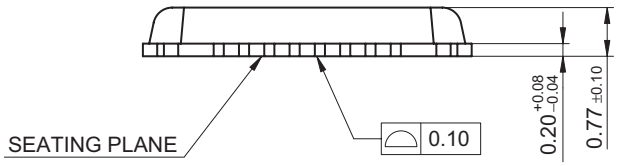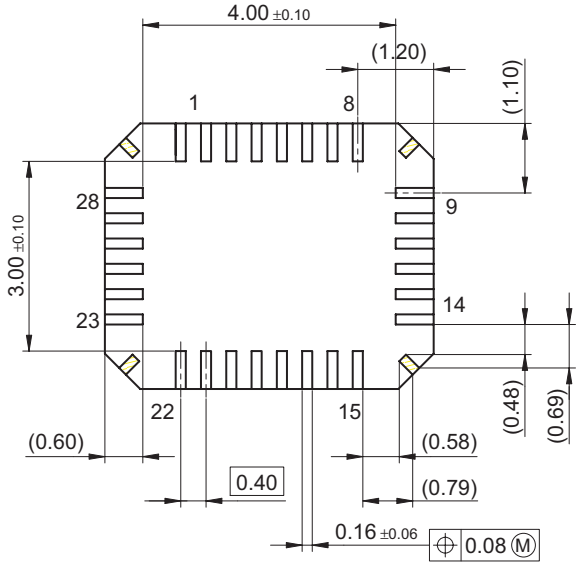
Unit: mm